Eijkelkamp
Soil & Water

Global Data Transmitter Single Prime GPRS/UMTS

Service manual (original instructions)

- GPRS or UMTS version
- Internal barometric and temperature sensor
- Data available on Eijkelkamp web portal or e-mail
- Easy to link to your own web environment (through API)
- External antenna connection
- Powered with standard alkaline batteries
- Lithium battery pack for intensive use (optional)
- Real time alarms possible (flood control)
- Secure data transmission
- Plug and play

Meet the difference

Eijkelkamp Soil & Water
P.O. Box 4, 6987 ZG Giesbeek,
the Netherlands

T +31 313 880 200
E info@eijkelkamp.com
I www.eijkelkamp.com

S-1134E

Contents

1 Introduction

1.1 About this manual

This manual is intended as a reference manual by which service personnel can carry out the maintenance and configuration of the Global Data Transmitter Single Prime GPRS (or GDT-S Prime UMTS), henceforth called modem. For an overview of the modem and its components, refer to chapter 3. Make sure that you

- know the contents of this manual;
- follow up all directions;
- never change the sequence of the procedures.

1.2 Original instructions

The original instructions for this manual have been written in English. Other language versions of this manual are a translation of the original instructions.

2 Safety

2.1 Symbols in the manual

WARNING
'Warning' identifies a hazard that could lead to personal injury, including death.

CAUTION
'Caution' identifies a hazard that could lead to damage to the machine, damage to other equipment and/or environmental pollution.

Note
'Note' is used to highlight additional information.

2.2 Intended use

The modem is designed to communicate with a sensor (e+ logger or Diver) in the field. The modem has 1 sensor port, so only 1 sensor can be connected to the modem. The user can configure the modem according to his/her own wishes, for instance regarding wake-up interval.

CAUTION
The modem has class IP68 protection (only with connected connectors). This means the modem is dust protected and resistant against temporary immersion. The temporary immersion must not exceed 50 hours, at a maximum of 2 meter under water. Do not continuously submerge in water. When there is water inside the enclosure, contact Eijkelkamp Soil & Water.

CAUTION
Every other or further use is not in conformance with the intended use.

2.3 Qualification of the user

The user should have a general knowledge about the use of a computer system and computer programs. For the basic maintenance work a general technical background is required.

2.4 Liability

The modem is delivered factory sealed with IP68 protection class (50hrs@2mH_2O).

CAUTION
We prefer not to open the modem in the field. Only open the modem in a clean and dry environment. Avoid unnecessary opening of the modem.

The IP68 protection class can only be preserved and guaranteed when the following parts are clean, dust-free and undamaged:
- enclosure;
- sealing of the enclosure;
- connectors.

Furthermore, make sure that:
- The sensor cable is correctly connected. Refer to 4.4.3.
- The modem is mounted correctly in the monitoring well. Refer to 4.4.1.
- The work is performed according to the local ESD safety regulations.
- Only original Eijkelkamp or recommended parts are used.

2.5 Regulations and instructions

2.5.1 Modem

WARNING
- **Do not use the modem when it is wet or moisty inside the enclosure.**
- **Dry a wet or moisty modem with a dry, lint-free cloth. Do not dry the modem in any other way.**

Note
Never take a lithium battery or a modem with an installed lithium battery with you as luggage during a flight. Due to severe civil aviation regulations (class 9 dangerous goods), it is forbidden to take a lithium battery with you during a flight. The lithium battery, or modem with lithium battery enclosed, should be officially packaged with the necessary certificates and send by air cargo. Make sure that you comply with the aviation regulations.

2.5.2 Battery

The modem will operate with two Alkaline D-type batteries or with a Lithium DD-type battery, refer to 9.1.
Which type you use depends on your lifetime requirements for the battery.
This lifetime will largely depend on the frequency of the wake-up interval.

The DD-type battery contains Lithium metal. This battery has a high energy density so they must be handled with care. Incorrect usage could lead to overheating and explosion

WARNING
- **Do not use a damaged battery.**
- **Keep the battery away from fire or heating source.**
- **Do not submerge the battery in water.**
- **Always use the correct battery.Only use original parts.**
- **Do not short circuit the battery.**
- **Do not charge the battery.**

Note
Never take a lithium battery or a modem with an installed lithium battery with you as luggage during a flight. Due to severe civil aviation regulations (class 9 dangerous goods), it is forbidden to take a lithium battery with you during a flight. The lithium battery, or modem with lithium battery enclosed, should be officially packaged with the necessary certificates and send by air cargo. Make sure that you comply with the aviation regulations.

2.5.3 Connection

WARNING
Do not use worn and/or damaged cables.

2.6 Environment and disposal of waste

CAUTION
Always observe the local rules and regulations with respect to processing or disposing of (non-reusable) parts.

CAUTION
Always first remove the battery. Refer to 8.4. For correct disposal of the battery, refer to 2.6.2.

2.6.1 Correct disposal of the product

WARNING
Do not dispose with other types of waste! This could possibly cause harm to the human health or the environment.

If worn, damaged or not necessary anymore, please return the modem to your local dealer for correct disposal or repair.

2.6.2 Correct disposal of the battery

WARNING
Do not dispose with other types of waste! The battery contains substances that can cause harm to the human health or the environment.

To protect natural resources and promote material reuse, separate batteries from other types of waste and recycle them through your local battery return system.

CAUTION
Never return the DD-cell battery to the local dealer by air transport because this battery contains lithium.

3 Product overview

3.1 Outside view

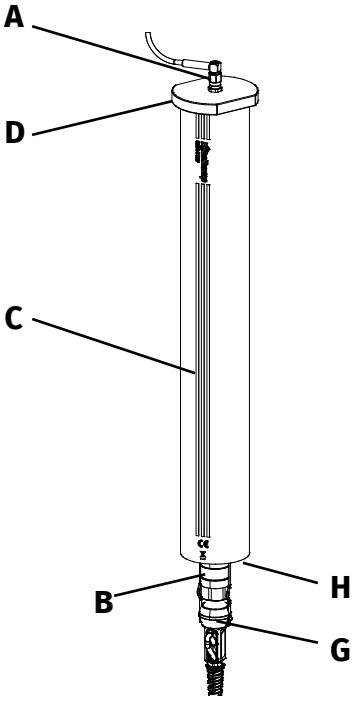

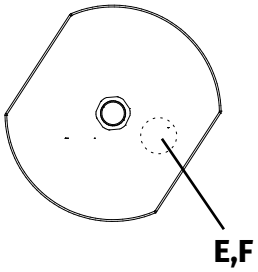

A Antenna connector[1]
B 1 sensor port[1] (5-pin male connector, A-coded)
C Enclosure
D Top cap
E Start switch (magnetically activated)
F Connection / Error LED
G Sensor cable
H Vent

CAUTION
The modem has class IP68 protection (only with connected connectors). This means the modem is dust protected and resistant against temporary immersion. The temporary immersion must not exceed 50 hours, at a maximum of 2 meter under water. Do not continuously submerge in water. When there is water inside the enclosure, contact Eijkelkamp.

1 Including a protection cap

3.2 Inside view

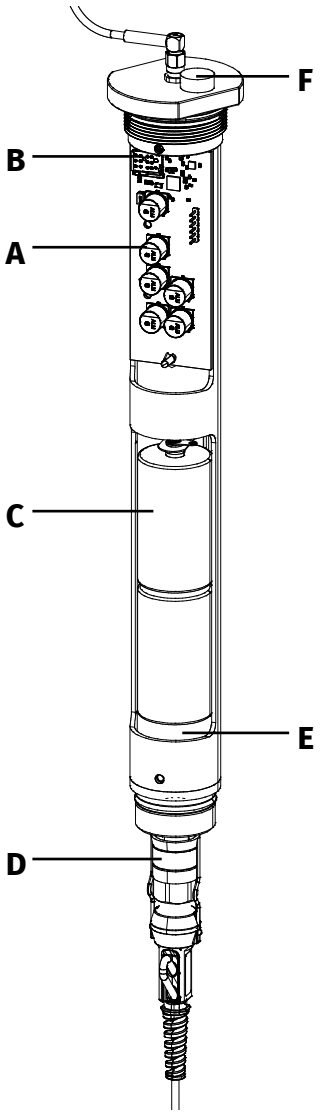

A PCB
B SIM card (in SIM card holder)
C Battery
D Sensor connector
E Desiccant bag
F Magnet

3.3 Explanation of the controls

The controls consist of a Start switch (magnetically activated) and one LED (connection or error). Refer to 3.3.2 for the explanation of the LED. After the Start switch is magnetically activated, the LED shows the status of the modem after the connection has been established (or if it has failed). To save energy, the LED will be automatically disabled after about 15 seconds once a successful connection has been established, or after an error has occurred.

Note
The LED is always OFF until the Start switch is magnetically activated.

Note
When the batteries are inserted into the modem:

- **The green and the red LED will go on simultaneously to indicate the modem is powered. Shortly after that the green LED will blink to indicate that the modem is establishing contact with the GDT-server.**

3.3.1 Start switch

The Start switch (magnetically activated) is used to initially turn on the modem and afterwards to establish a connection to the GDT Server.

The Start switch is concealed in the top cap.

When the Start switch is magnetically activated :
- The green LED will blink.
- The modem starts to connect to the GDT Server.
- When the connection is established the green LED stays on for 15 seconds.

Note
It is not possible to turn off the modem by magnetically activating the Start switch.

3.3.2 Connection / Error LED (green/red)

The Connection LED shows the status of the connection with the GDT Server.

LED	Description
Blinking (green)	The modem is busy connecting to the GDT Server.
ON (green)	The modem is connected to the GDT Server.
Blinking (red)	An error occurred
OFF	The modem is operating normally

3.4 Technical data

3.4.1 Mechanical specifications

Specification	Dimensions
Enclosure	đ enclosure 48 mm, đ top cap 60 mm, length 340 mm

Specification	Weight
GDT-S prime (incl. alkaline batteries)	approx. 890 g

Specification	Materials
Enclosure	Alu EN AW-6060, top cap POM (synthetic material), bottom cap POM (synthetic material)

3.4.2 Electrical specifications

Item	Specification
Battery size: D	2x 1.5 V Alkaline-Manganese Dioxide
Life time of the battery	Based on Duracell MX1300 and ambient temperature of 10°C 3 years (at a 1 hour measurement interval and 24 hour wake-up interval)
Modem time accuracy	better than 15 seconds/day
Modem time accuracy	better than 1 minute/day

Item	Specification
Battery DD (internal)	3.6 V (Lithium metal)
Life time of the battery	Based on Tadiran SL-2790 and ambient temperature of 10°C 10 years (at a 1 hour measurement interval and 24 hour wake-up interval)
Modem time accuracy	better than 15 seconds/day

3.4.3 Connections

Messaging	Specification
Message mode	web portal, e-mail, SMS alarm, other
GPRS	Quad band type (850, 900, 1800, 1900 MHz)
UMTS (optional)	Five band (800,850,900,1900,2100 MHz)
SIM card (nano SIM card socket)*	Multi-network SIM M2M
Antenna connector	SMA connector
Sensor port	5-pin male M12 connector, A-coded

* SIM card exchangeable by the user. The functionality of SIM cards other than Multi-network SIM M2M is guaranteed only after the functionality tests are fulfilled by Eijkelkamp. Therefore it is advised to use tested SIM cards only.

Integrated barometer sensor	Specification
Barometer measuring range	10 ... 1200 mbar *
Resolution	0.01 mbar
Accuracy barometer	± 2 mbar (at 300 ... 1100 mbar, 0 ...50 °C
Temperature measuring range	-40 ... +85 °C
Resolution	0.01 °C
Accuracy temperature	± 0.8 °C (at 25 °C) ± 2.0 °C (0 ... 50 °C)

* 1 mbar is approximately 1 cmH_2O

Antenna	Specification
GPRS (external)	Quad band type (850, 900, 1800, 1900 MHz)
UMTS (optional)	Five band (800,850,900,1900,2100 MHz)
Connector	SMA Bulkhead

Sensor ports	Specification
Number of sensor ports	2
Port 1 (external)	sensor (e+ logger or Diver) via sensor cable
Port 2 (internal)	integrated barometer and temperature sensor

3.4.4 Ambient conditions

Item	Specification
Temperature	-20 ... +60 °C
Ingression protection (enclosure)	IP68 (50 hours@2mH_2O)

3.4.5 Certifications

Item	Specification
CE	CE compliant
EMC / ESD	EN 61000-6-2:2005 / EN 61000-6-4: 2005

4 Getting started

4.1 Unpacking

1. When unpacking, carefully follow the instructions as given on the packaging or on the product.
2. Check that your delivery is correct and complete. Refer to the order list and the delivery list. If incomplete, contact Eijkelkamp Soil & Water.

CAUTION
Depending on the order, the modem is pre-installed with SIM card. Avoid unnecessary opening of the modem because of the risk of leakage.

3. Check the delivery for any transport damage. Report any damage immediately by filing a claim against the carrier and mark the bill of lading accordingly.

4.2 Installing batteries

The modems needs to be fitted with batteries, therefore refer to 5.4 for placing them.

4.3 Setting up first-time communication

A new modem needs to be setup for customer use. This can be done by scanning the QR-code on the slider.

In the web page that opens the initial settings for a specific modem can be changed.

Note
If there is a problem, please contact Eijkelkamp Soil & Water.

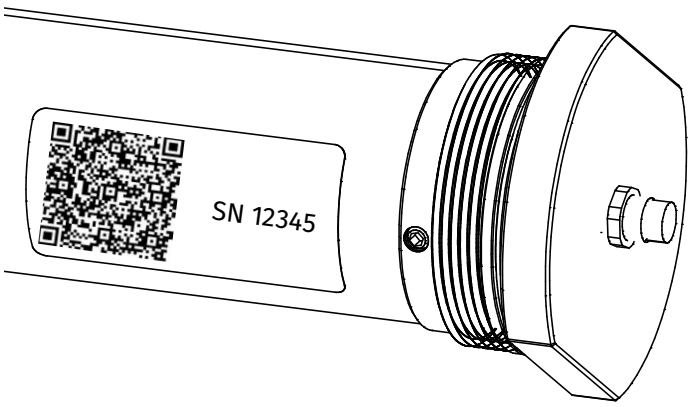

4.4 Installation

CAUTION
The guarantee will be void when the modem is not used for its intended use and/or at incorrect installation. Refer to 2.2 and 2.4.

4.4.1 Mounting the modem

CAUTION
- **Place the modem in a protective environment.**[2]
- **Do not expose the modem to direct sunlight.**
- **Avoid deformation of the enclosure.**
  - **Do not use too much force when mounting the modem.**
- **The connector should be easily reachable and there should be enough space to connect the cable to the connector.**
- **All parts must be clean and dry prior to installation.**
- **Do not expose the modem to vibration, direct heat sources and/or forms of radiation and magnetism.**

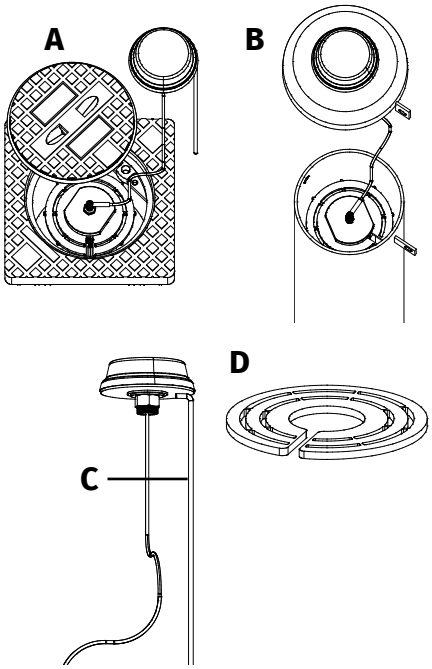

We distinguish two installation methods, namely;
1. Directly in the monitoring well, e.g. finished with a street cover (A)
or
2. In a monitoring well that is installed in a well cover (B)

The modem is fitted with a GPRS / UMTS antenna GDT-S Prime (art. no: 11.34.34).
The external antenna is intended to be installed on the cover of the well cover or with the mounting plate (C) in the street cover.

Adjust the universal monitoring well adapter ring (D) to your monitoring well so that the modem hangs correctly in the monitoring well. Then connect the sensor cable to the modem. Install sensor, sensor cable and modem into the well cover.

2. If the protective environment is air-tight, the internal barometer data cannot be used. In this case, use the data of another barometer location or external Baro Diver.

4.4.2 Connecting the antenna

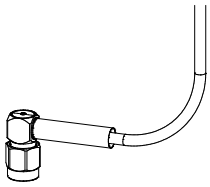

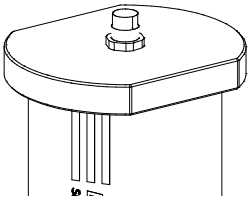

CAUTION
All parts must be clean and dry prior to installation.

1. Mount the antenna.
2. Screw the SMA connector onto the modem. Do not use more torque than 5 lbs/0.57 Nm.

CAUTION
Do not use force.

4.4.3 Connecting the sensor cable

CAUTION
All parts must be clean and dry prior to installation.

CAUTION
Do not use force. There is only one way to connect the cable to the sensor port. Always check the position of the positioning cam (B).

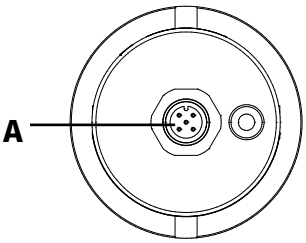

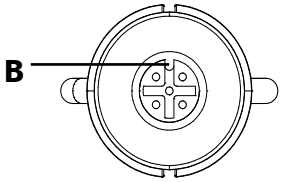

1. Slide the safety cord (C) over the sensor connector (D).
3. Install the sensor cable connector, pay attention to the postioning cam (B).
4. Fasten the sensor cable by turning the locking ring clockwise.

CAUTION
Do not fasten the cable too tight onto the connector. Use your thumb and index finger. For an internally clean connector, the IP68 protection class is guaranteed at a torque of 0.6 Nm.

5. Click the safety cord in the safety ring (E).

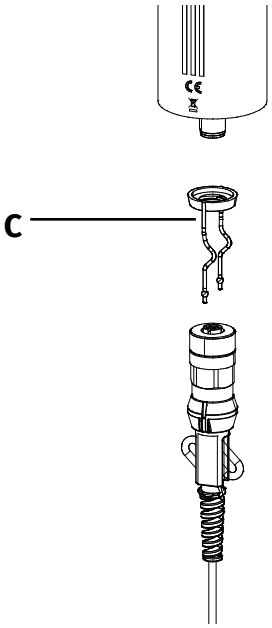

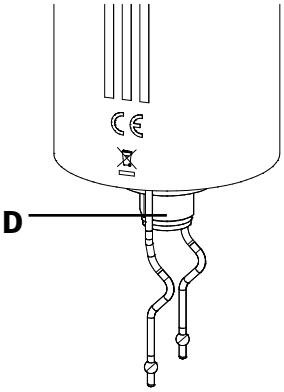

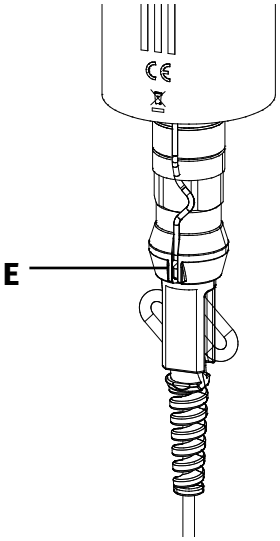

4.5 Commissioning

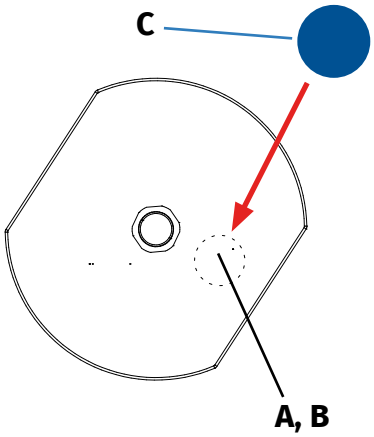

A Connection / Error LED (green/red)
B Start switch
C Magnet

1. Activate the Start switch by moving a magnet (C) close to position B on top of the modem. The connection LED (A) will start blinking green..

Note
The LED should blink green. Refer to 3.3 to see which status the LED indicates.

2. The GDT Server will activate the connected sensor.
3. If commissioning is OK the green LED goes off after 15 seconds.

Note
If the LED should blink red, follow the steps from the table below.

Option	Specification
1	Retry the activation with the Start switch
2	Reposition the antenna, for example higher up
3	Check if the SIM card is correctly installed
4	Check with the network provider if the connection still works correctly
5	If none of the above solves the problem, contact Eijkelkamp

5 Operation

5.1 Data communication

5.1.1 Data communication overview

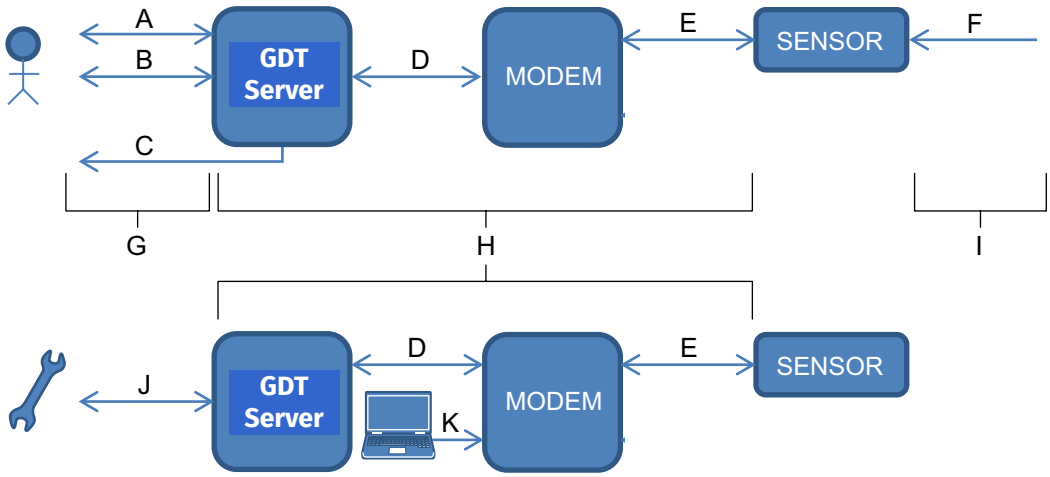

A Eijkelkamp Webportal
B E-mail
C SMS alarm
D GSM network
E Sensor cable
F Sensor measurement
G Send interval
H Wake-up interval (shorter when alarm is set)
I Measurement interval
J BBT (Backoffice Beheer Tool)
K API link

Device / tool	Communication	Activity
Sensor	Sensor cable	• perform the measurements • store data
Modem	Sensor cable GPRS (UMTS is optional)	• intermediates between the GDT Server and the sensor • communicates with the GDT Server • the internal barometer measures the air pressure and temperature
GDT Server	GPRS (UMTS is optional)	• communicates with the modem and its connected sensor(s) • collects and stores data • configures the modem and sensor settings
Eijkelkamp Web Portal E-mail BBT (Backoffice Beheer Tool)	Internet	• user can configure modem and sensor settings • receives data from the GDT Server • user can view the status of the modem and sensor(s)

Device / tool	Communication	Activity
(laptop) computer (with service tool)	Service cable	• Eijkelkamp Soil & Water service user can configure modem and sensor settings • Eijkelkamp Soil & Water service user can view the status of the modem and sensor E

5.1.2 Communication intervals

The following figure shows an example of how the various communication intervals between the devices can be arranged.

A Measurement interval of sensor 1
B Wake-up interval
C Measurement interval of internal Barometer (not modifiable)
D Send interval

Measurement interval
A measurement interval is the interval between two sensor measurements of a sensor. The measurement interval can be adjusted.

Wake-up interval
The wake-up interval is the frequency in which the modem starts up (wakes up from sleep mode) to intermediate between the GDT Server and the connected sensor.

Note
SMS messages are only sent in case of an alarm situation (and hence not in a specific interval).

Send interval
The send interval is the frequency with which the GDT Server collects any unsent measurement data and sends the new data to the user or the Eijkelkamp Web Portal.

5.1.3 Access overview

The table below shows the various ways in which the modem can be accessed.

Application	Intended user	Explanation	Refer to
Eijkelkamp Webportal	End-user	Designed for the end-user to view data and configure the essential operating variables.	Online manual on Eijkelkamp Webportal
E-mail	End-user Service personnel	A functionality for the end-user to receive data and configure the modem and sensor.	Supplement 2 of the User manual
BBT (Backoffice Beheer Tool)	Service personnel	Designed for service personnel to remotely configure the modem. It allows the configuration of a large number of operating variables.	Chapter 7

Application	Intended user	Explanation	Refer to
Service tool	Service personnel	Designed for service personnel to set-up or restore the connection between the modem and the GDT Server and to check modem status and/or configure modem and logger	Chapter 6

5.1.4 Service software applications

The software service duties include the following activities:
- Preparing the modem for use
- Setting up and establishing connection with the GDT Server
- Changing settings that cannot be changed by the end-user
- Detecting and solving errors
- Performing ffirmware updates

Service has the following tools to perform these activities:
- Service tool. Refer to Chapter 6.
- BBT (Backoffice Beheer Tool). Refer to Chapter 7.
- Web portal, e-mail functionality.

The settings of the modem can be configured remotely via the BBT or on location via a computer (laptop) that contains the Service tool.

5.2 Parameter settings

Almost all parameter settings can be configured by the BBT. Some parameter settings only by the Service tool and the e-mail functionality (refer to Supplement 2). The following sections give an overview of the modem settings that can be viewed (read-only) and/or changed. Refer to the online manual and Supplement 2 as for more information.

5.2.1 Abbreviations

Abbrevation	Explanation
L	Local (IRDA)
E	E-mail
S	Service web
RO	Read only
RW	Reading and Writing

Note
All parameters are available in the BBT. Some subsets are available in the e-mail functionality and local Service tool.

5.2.2 Modem parameters

Parameter	Explanation	Default value	Range	Permission		
				L	E	S
SerialNumber	The serial number of the modem	<empty>	up to 16 digits	RW	RO	RO
SoftwareVersion	The software version of the installed software in the modem		n.a.	RO	RO	RO
HardwareVersion	The version of the hardware of the modem Service web		n.a.	RO	RO	RO
SignalStrength	The current signal strength of the network connection (in dBm)		-127 to 128	RO	RO	RO
Active	Accepts GDT Server connections for the modem. The send interval becomes active.	1	0-1	--	--	RW
Temperature	The current temperature (in °C)		-40 to 85	RO	RO	RO
AirPressure	The air pressure that is measured by the internal barometer (in cmH_2O)		10 to 1200	RO	RO	RO
ModemStatus	Bitmask			RO	--	RO
ModemType	The type of the modem	1	1	--	--	RO
Location	The location of the modem	<empty>	up to 20 characters	RW	RW	RW
GPSLocation	The GPS coordinates of the location of the modem.	<empty>	up to 20 characters	--	RW	RW
Workorder	Eijkelkamp work order number	0	0 to 99999999	--	--	RW
RTCSyncEnable	Do we need to sync the internal Real Time Clock?	1	0-1	--	RW	RW
RTCSyncInterval	Days between RTC syncs	120	1 to 255	--	RW	RW
DaylightSaving	Enable/disable daylight saving (DST)	1	0-1	--	RW	RW
TimeZone	The time zone in which the modem is situated.	Europe\ Amsterdam	(see table	--	RW	RW
SMSAlertLanguage	The language for the SMS alarms.	NL	NL (Dutch) ENG (English) FR (French) GER (German)	--	RW	RW
Redundancy	Indicates the number of send intervals to send messages again during a send interval.	0	0-2	--	RW	RW

Parameter	Explanation	Default value	Range	Permission		
				L	E	S
Wakeup delay	The number of seconds the wakeup interval is postponed.	0	0 to 3600	--	--	RW
Emailaddress	Up to 4 e-mail addresses can be entered to receive the e-mails (at least e-mail address-1 should be filled in).	<empty>	Legal e-mail address of up to 64 characters	--	RW	RW
Destinationnumber	Up to 4 telephone numbers to receive SMS alarms.	<empty>	Telephone number including the country code, excluding preceding zeros or plus signs (8 to 14 digits)	--	RW	RW
AttachmentType	Determine the attachment type for the data file.	MON	MON or CSV	--	RW	RW
ConvertToAbsolute	Convert measurement of older type Divers to new Diver representation.	1	0-1	--	RW	RW
ExportAsMiniDiver	Make internal barometer look like a Diver so the attachment can be imported into Diver Office.	0	0-1	--	RW	RW
Alarmconfiguration	Alarmconfiguration is used to setup alarm checking by the GDT-S Prime itself, if the alarm situations changes the GDT-S Prime wakes up prematurely. This way alarms can be communicated real-time instead of waiting for the regular wake-up		Possible alarm messages, single or combinations separated by ; Alarm present No alarm Error Disabled	RO	RO	RO
CSVIncludeHeader	Include sensor information in the CSV attachment file.	0	0-1	--	RW	RW
CSVDeactivate-Channels	Show or Hide deactivated ports (channels) in the CSV attachment file.	0	0-1	--	RW	RW
CSVSeparator	Determine the column separator in the CSV attachment file.	1	0 = tab 1 = ;	--	RW	RW
CSVDecimal	Determine the decimal sign in the CSV attachment file.	.	, or .	--	RW	RW
Password	Extra optional security layer.	<empty>	up to 255 characters	--	--	RW
StoreDiagnostic	Should the diagnostic parameters be stored? (a sensor will be created).	0		--	--	RW

5.2.3 Modem server settings

Parameter	Explanation	Default value	Range	Permission		
				L	E	S
SMTP server	Server used to send e-mails	mail.eijkelkampcarefree.com		--	--	RW
SMTP port	Port used to connect to server	25		--	--	RW
SMTP user	Credentials to logon to server	<empty>		--	--	RW
SMTP password	Credentials to logon to server	<empty>		--	--	RW
SMTP from	The sender of the e-mails	noreply@eijkelkampcarefree.com		--	--	RW
SMTP status	Status information about server			--	--	RW
IMAP server	Server used to receive e-mails	mail.eijkelkampcarefree.com		--	--	RW
IMAP port	Port used to connect to server	143		--	--	RW
IMAP user	Credentials to logon to server	<empty>		--	--	RW
IMAP password	Credentials to logon to server	<empty>		--	--	RW
IMAP folder	Where to look for e-mails	INBOX		--	--	RW
IMAP status	Status information about the server			--	--	RW
Service email address	E-mails from this address are always accepted	gdtservice@eijkelkamp.com	See e-mail	--	--	RW
Service destination number		31653133119	See destination address	--	--	RW
Send system alarms	Also send text SMS-es concerning system errors or not	1	0-1	--	--	RW

5.2.4 Interval timing

Parameter	Explanation	Default value	Range	Permission		
				L	E	S
DateTime	Current date time of modem in POSIX time	0	0 to 4294967295	RW	--	--
WakeUpInterval	The wake-up interval of the modem (in seconds)	3600	0 to 86400	RW	RW	RW
WakeUpDelay	Delay of the wakeup interval to enable the connected sensor(s) to perform the measurement	5	0 to 3600	--	--	RW
LastConnection	Date time of last connection with GDT Server in POSIX		0 to 4294967295	--	--	RO
PowerMode	The power mode in which the modem operates	0	0 = energy saving 1 = always-on 2 = battery backup	--	--	RW
SendInterval	The interval (in seconds) between two e-mails	86400	0 to 31536000	--	RW	RW
SendStart	Time when to send the first e-mail	08:00	HH:mm	--	RW	RW
LoggerStartTime	Time to calculate the future start of the connected sensor	08:00	HH:mm	--	--	RW

5.2.5 Battery

Parameter	Explanation	Default value	Range	Permission		
				L	E	S
BatteryCapacity	Battery capacity of the modem (%)	<no value>	0 to 100	RW	RO	RO
BatteryCapacity-Alarm	Battery capacity of the modem (%) when to send an low battery alert	5	5 1 to 99	--	RW	RW
BatteryCapacity-max	The maximum capacity of the battery (µAh)	26000000	1 to 10000000	RW	--	RW
BatteryCapacity-Used	The battery capacity of the battery pack in µAh.	0	0 to 10000000	RW	--	RW
BatteryCapacity-Low	The modem will not wake up if the battery is below this capacity	1	0 to 100	--	--	RW

5.2.6 Wireless Module settings

Parameter	Explanation	Default value	Range	Permission		
				L	E	S
ModuleType	Information about the GSM/ GPRS/UMTS module	<no value>		RO	--	RO
CurrentProvider	Information about the current network provider	<no value>		--	--	RO
APNaddress	The registered address of the modem that is used for the connection to the network.	m2m. vodafone.nl		RW	--	RO
APNuser	The registered user name that is used for the connection to the network.	vodafone		RW	--	RO
APNpassword	The registered password that is used for the connection to the network.	vodafone		RW	--	RO
PIN	The PIN code that is used to unlock the SIM card	<emtpy>		RW	--	??
Network-Selection	Determines the network selection	0	0 = SIM card preferred network 1 = detect best available network once 2 = always detect best available network	--	--	RW

5.2.7 Eijkelkamp Smart Sensoring Management Protocol parameters

Parameter	Explanation	Default value	Range	Permission		
				L	E	S
GDT Server address	The address of the GDT Server to which the modem is connected online	e-sense.eijkelkamp carefree.com	up to 64 characters	RW	--	RO
TCP portnumber	The TCP port number for EMP	60128	49152 to 65535	RW	--	RO
Timeout powersaving	Period before a message is considered as lost	30	0 to 86400	--	--	RW
Retries powersaving	Number of retries to reconnect with the GDT Server	1	0 to 255	--	--	RW
Retryperiod powersaving	Period of time between the retries to reconnect with the GDT Server	300	0 to 86400	--	--	RW
Timeout always on	Period before a message is considered as lost (always on)	300	0 to 86400	--	--	RW

Parameter	Explanation	Default value	Range	Permission		
				L	E	S
Retries always on	Number of retries to reconnect with the GDT Server (always on)	10	0 to 255	--	--	RW
Retryperiod always on	Period of time between the retries to reconnect with the GDT Server (always on)	300	0 to 86400	--	--	RW
ServiceSpeed	Speed of the service port	115200	2400 to 115200	RW	--	RW
Service retries	Number of times a message is repeated on the service port	1	0 to 255	--	--	RW
Service packet timeout	Time between the connection attempts on service packet level.	5	1 to 60	--	--	RW
Service session timeout	Time between the connection attempts on service session level	30	1 to 60	--	--	RW
UseDefault EncryptionKey	Use the default encryption key at the next connection	1	0-1	RW	--	RW

5.2.8 Barometer log parameters

Parameter	Explanation	Default value	Range	Permission		
				L	E	S
Barolog	Log data of the measurements performed by internal barometer			RO	--	--
Barolog interval	Interval time between the baro-meter measurements (in seconds)	3600	1800 to 86400	--	--	RW
Barolog enable	Enables/Disables the internal barometer to perform measurements	1	0 = disabled 1 = enabled 2 = alarm on-demand (GDT-S Prime only)	--	--	RW

5.2.9 Sensor port parameters

Parameter	Explanation	Default value	Range	Permission		
				L	E	S
NrLoggerRetries	Number of times a message is sent again to a sensor if sending the message has failed the previous time(s)	4	0 to 255	--	--	RW
CachingEnable	Bit representation of port to cache	0 (no ports)	0 to 65535	--	--	RW
CachingMessage	Message that will be send if caching is enabled			--	--	RW
SmartCaching Enable	Only cache ports with sensor attached at the start-up	0	0-1	--	--	RW
LoggerResponse TimeOut	Time in which the sensor must respond	3	1-10	--	--	RW
LoggerMessage-TimeOut	Minimum idle time after receiving a logger message (msec)	100	1 to 1000	--	--	RW
Logger Wakeup Delay	The wake-up delay between a wake-up character and the actual command (in msec)	10	10 to 100	--	--	RW

5.2.10 Sensor parameters

Parameter	Explanation	Default value	Range	Permission		
				L	E	S
LoggerType	Code to describe the attached sensor (logger)		0 = Diver 1 = Internally compensated Diver 2 = e+ logger 5 = Internal barometer 6 = SDI-12	--	RO	RW
SerialNumber	The serial number of the sensor			RO	RO	RO
Instrument Number	The instrument number of the sensor			RO	RO	RO
BatteryCapacity	Current battery capacity of the sensor (%)		0-100	RO	RO	RO
BatteryCapacity alarm	Send a battery low alarm if the battery of the sensor is below the threshold	20	1 to 99	--	RO	RW
Location	Location of the sensor. Forbidden characters: [/ : \ “ < > | * ?]		up to 20 characters	RO	RW	RW
Offset	Change the starting point of port 1			--	RW	RW
Altitude	Used for old type Divers in convert to absolute conversion	0	0 to 30000	--	RW	RW
Internal Compensation	Barometric compensation performed by the GDT Server based on the internal barometer data (Diver only)	0	0-1	--	RW	RW
Average Measurement	Sensor performs 10 measurements during a sample interval, and stores the average measurement (e+ only)	0	0-1	--	RW	RW
Sample interval	The measurement interval between two sensor measurements of a sensor in seconds		1 to (99*3600)	--	RW	RW

5.2.11 Sensor channel parameters

Parameter	Explanation	Default value	Range	Permission		
				L	E	S
Activated	Enable to return data for the sensor port	1	0-1	--	RW	RW
Identification	Description of the port		0-20 characters	--	RW*	RW*
Minimum value	The minimum value this port can measure (in layman's terms)		Max. 10 characters incl. + or - and .	--	RW*	RW*
Maximum value	The maximum value this port can measure (in layman's terms)		Max. 10 characters incl. + or - and .	--	RW*	RW*
Unit	The unit value in which this port measures its measurements		0-6 characters	--	RW*	RW*
AlarmHigh	If the current value gets above this threshold, the current alarm situation becomes 'Alarm high'.	Maximum value	HysteresisLow to Maximum value	--	RW* **	RW* **
HysteresisHigh	If the current value gets below this threshold, the current alarm situation becomes 'none'.	Maximum value	AlarmLow to AlarmHigh	--	RW* **	RW* **
HysteresisLow	If the current value gets above this threshold, the current alarm situation becomes 'none'.	Minimum value	AlarmLow to AlarmHigh	--	RW* **	RW* **
AlarmLow	If the current value gets below this threshold, the current alarm situation becomes 'Alarm low'.	Minimum value	Minimum value to HysteresisLow	--	RW* **	RW* **
Fluctuation Alarm	If the difference between two consecutive measurements is more than this threshold, the current alarm situation becomes 'fluctuation alarm'.	(Maximum value – Minimum value)	0 to (Maximum value – Minimum value)	--	RW* **	RW* **
AlarmState	The current alarm situation.	0 = No alarm 1 = Fluctuation 2 = Low 3 = Low and fluctuation 4 = High 5 = High and fluctuation		--	RO **	RO **

* This depends on the fact if the sensor can be changed.
** Alarms are not available for channel 1 of the internal barometer and Divers that are not internally compensated.

6 Service tool (local connection)

6.1 System requirements

Application	Version
Windows	Windows 7 or higher
.net	3.5
USB	1.1

Required: Service interface (art. no. 11.31.19) to connect a laptop with the modem to check and change the modem configuration in the field.

6.2 List of abbreviations

Abbrevation	Explanation
RO	Read-Only
RW	Reading and Writing permission

6.3 Default values

The screens in this chapter show example values. These are not necessarily the default values. Refer to 5.2 for the default values.

6.4 General overview

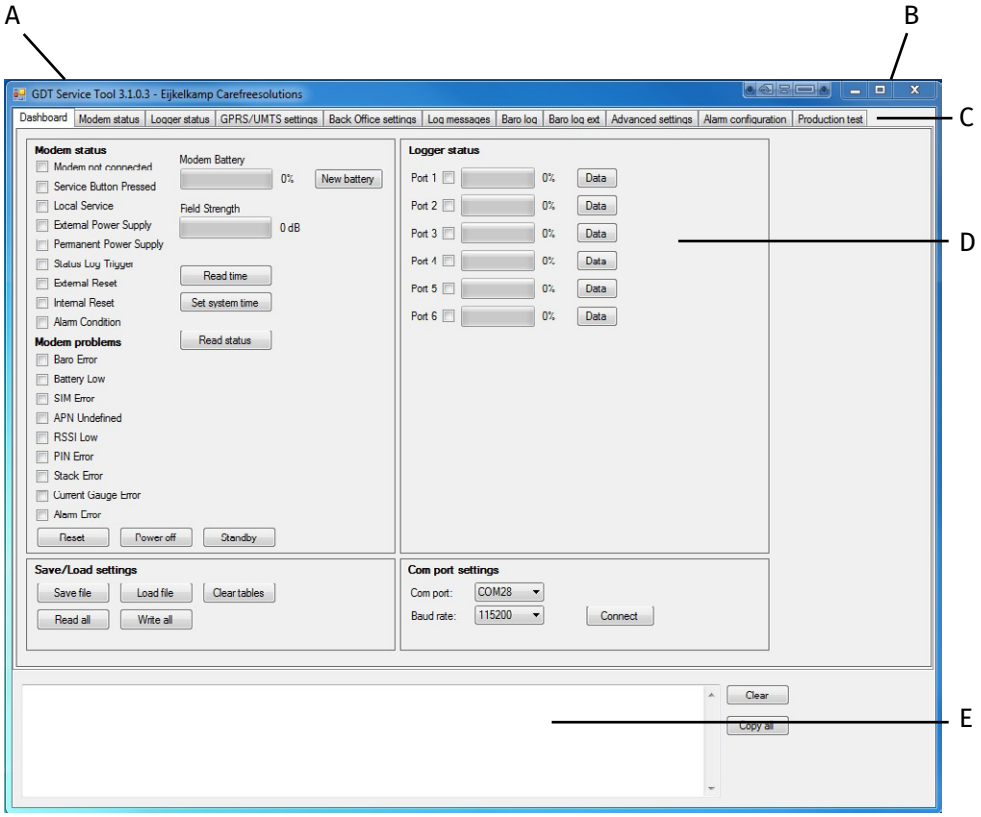

A Software application name and version
B Minimise, Maximise and Close buttons
C Menu tabs
D Data and settings pane
E Status box

6.4.1 Menu tabs

The table below shows the menu tabs.

Menu tab	Refer to
Dashboard	6.5
Modem status	6.6
Logger status	6.7
GPRS/UMTS settings	6.8
Backoffice settings	6.9
Log messages	6.10
Baro log	6.11
Baro log ext	6.12
Advanced settings	6.13
Alarm configuration	6.14
Production test	6.15

6.4.2 Status box

The status box displays information from the different tabs of the software to see which actions the software is performing or has performed. This way the user can see if the software is performing an action or not.

Button	Function
Clear	Clears the text box
Copy all	Copies all information to the clip board

6.5 Dashboard

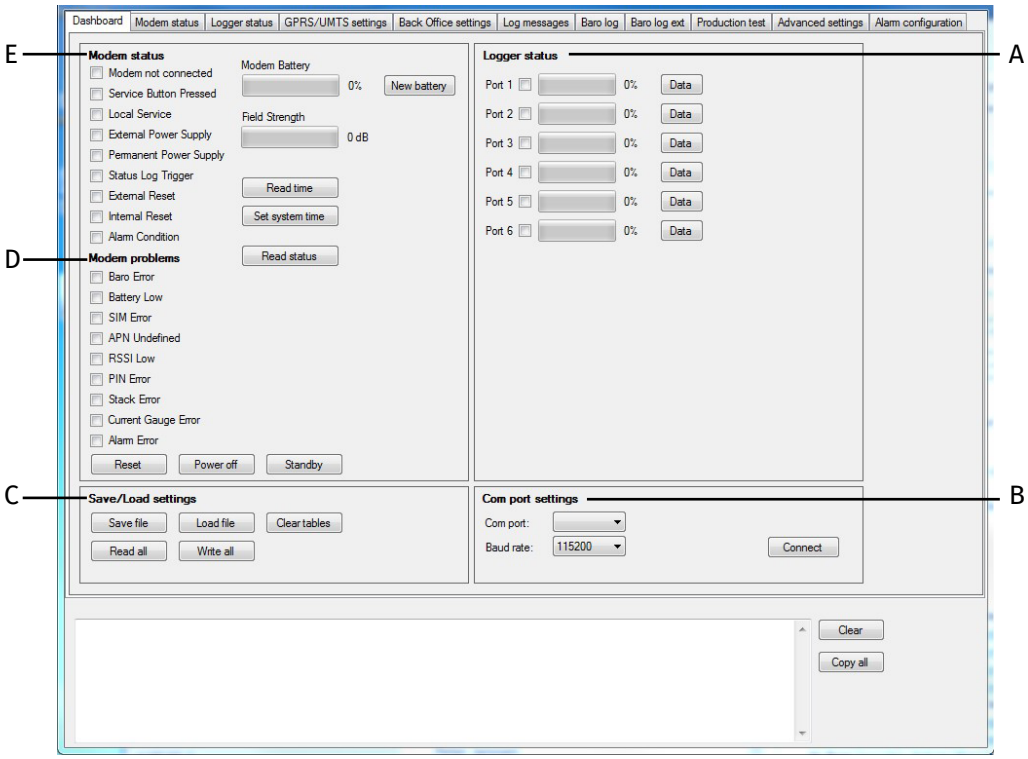

A Logger status
B Com port settings
C Save load settings
D Modem problems
E Modem status

When connected to the modem, the software will immediately give a quick summary of certain important data and settings in the Dashboard menu.

Note
Everytime when the user presses the service button on the modem and the Dashboard tab is selected, the data on the Dashboard will be refreshed. The Logger status data, however, will not be refreshed, because reading the status and settings of the various sensors takes too much time. Go to the Logger status tab and press the "Read settings" button in order to get the latest data from the connected sensors.

6.5.1 Modem status

Modem status	Explanation (if the box is thicked)
Modem not connected	The modem does not have a connection with the GDT Server.
Service button pressed	The Start switch button is pressed. The software will read the latest data.
Local Service	Indicates that there is a logical connection to the modem.
External Power Supply	An external power supply is connected to the modem.
Permanent Power Supply	The battery is connected to the modem.
Status Log Trigger	Indicates that something has changed in the status bits of the modem.
External reset	Indicates that the modem is reset by an external agent (GDT Server/BBT/ Service USB tool)
Internal reset	Indicates that the modem has reset itself.
Alarm condition	An alarm conditions has occurred

Modem problems	Explanation
Baro error	The internal barometer has an error.
Battery Low	The battery capacity of the modem is too low.
SIM error	The SIM card has an error or the SIM card cannot be read.
APN Undefined	The APN (Access Point Name) is not defined. There is no network connection.
RSSI Low	Indicates that the signal strength is low.
PIN Error	Indicates that the wrong PIN code or no PIN code is entered.
Stack Error	Indicates that there is a memory error.
Current Gauge Error	Indicates that there is an error in the part that measures the power consumption.
Alarm error	Indicates that there is an error when reading the measure values from the logger (s)

Buttons and status bars	Explanation
Modem battery (%)	Indicator that shows the battery capacity in %.
New battery	Informs the GDT Server server that a new battery is installed. The battery capacity indicator will turn to 100% full.
Field strength (dB)	Indicator that shows the signal strength of the network at the modem location in dB.
Read time	Enables the user to read the set date / time of the modem.
Set system time	Adjusts the date / time of the modem to the date / time of the connected computer.
Read status	Refresh/Read the modem status
Reset	Enables the user to reset the modem.
Power off	Enables the user to put the modem in the Power off mode.
Standby	Enables the user to put the modem in the Standby mode.

CAUTION
Do not press the *New battery* button without having installed a new battery. The modem cannot operate with an empty battery.
- **The Baro data will get lost and the modem cannot measure new Baro data.**
- **The modem cannot send new measurement data to the user.**

6.5.2 Logger status

Logger status	Explanation
Port	The tick box shows if a sensor is connected to the port. There is 1 sensor port on the modem.
Reading status (%)	Status bar that shows the status of the battery capacity of the connected sensor.
Data	Retrieves the collected data. Through a wizard you can save the data onto a selected location.

6.5.3 Com port settings

Com port settings	Explanation
Com port	Enables the user to select the com port.
Baud rate	Enables the user to select the baud rate (only 115200).
Connect	Makes the connection to the com port.

6.5.4 Save/Load settings

Save/load settings	Explanation
Save file	Saves the settings for the current connection only.
Load file	Loads external settings from a settings file. Through a wizard you can select the settings file that you want to use.
Clear tables	Clears all settings in all the tables of all the tabs at once.
Read all	Enables the user to read all the settings at once.
Write all	Enables the user to write all the settings at once.

6.6 Modem status

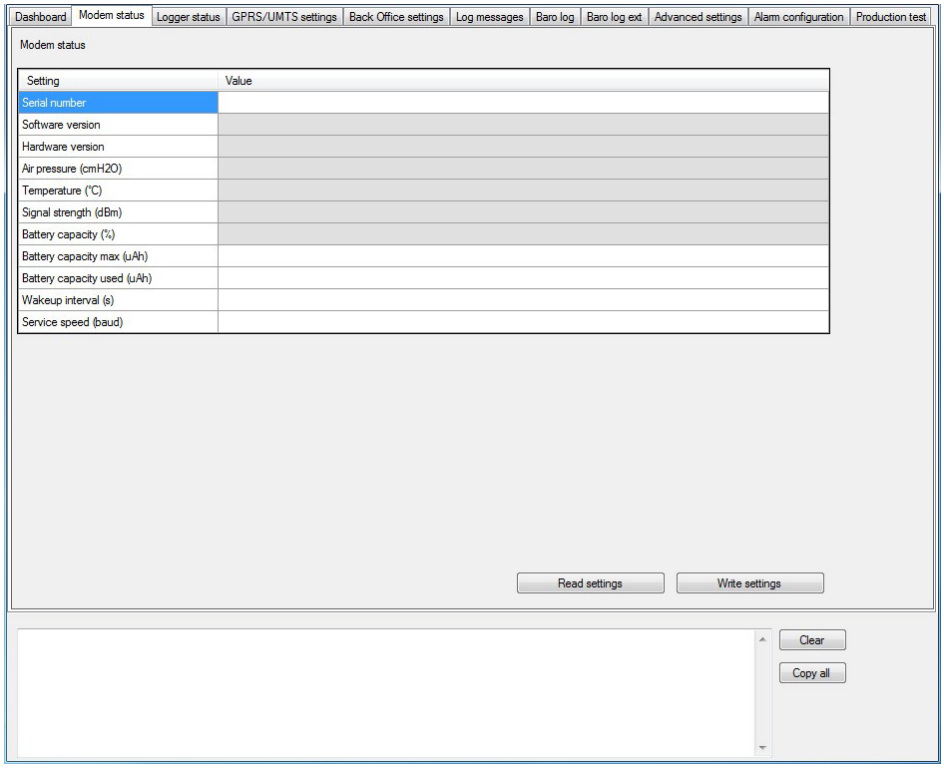

In this menu, the user can refer to the relevant information about the modem and its environment. Only some of the settings can be changed, saved and loaded.

Parameter	Explanation	Permission
Serial number	The serial number of the modem.	RW
Software version	The software version of the installed software in the modem.	RO
Hardware version	The version of the hardware of the modem.	RO
Air pressure (cmH_2O)	The air pressure that is measured by the internal barometer (in cmH_2O).	RO
Temperature (°C)	The ambient temperature of the modem.	RO
Signal Strength (dBm)	The current signal strength of the network connection (in dBm).	RO
Battery capacity (%)	The battery capacity of the battery inside the modem.	RO
Battery capacity full (uAh)	The maximum battery capacity of the battery (when the battery is full)	RW
Battery capacity used (uAh)	The battery capacity used by the battery in µAh.	RW
Wakeup interval (s)	The wake-up interval of the modem (in seconds).	RW
Service speed (baud)	The speed of the data transfer connection.	RW

Button	Function
Read settings	Starts the action of reading the parameter values.
Write settings	Starts the action of saving the parameter values that has been changed.

6.7 Logger status

In this menu, the user can refer to the relevant information about the connected sensor(s).

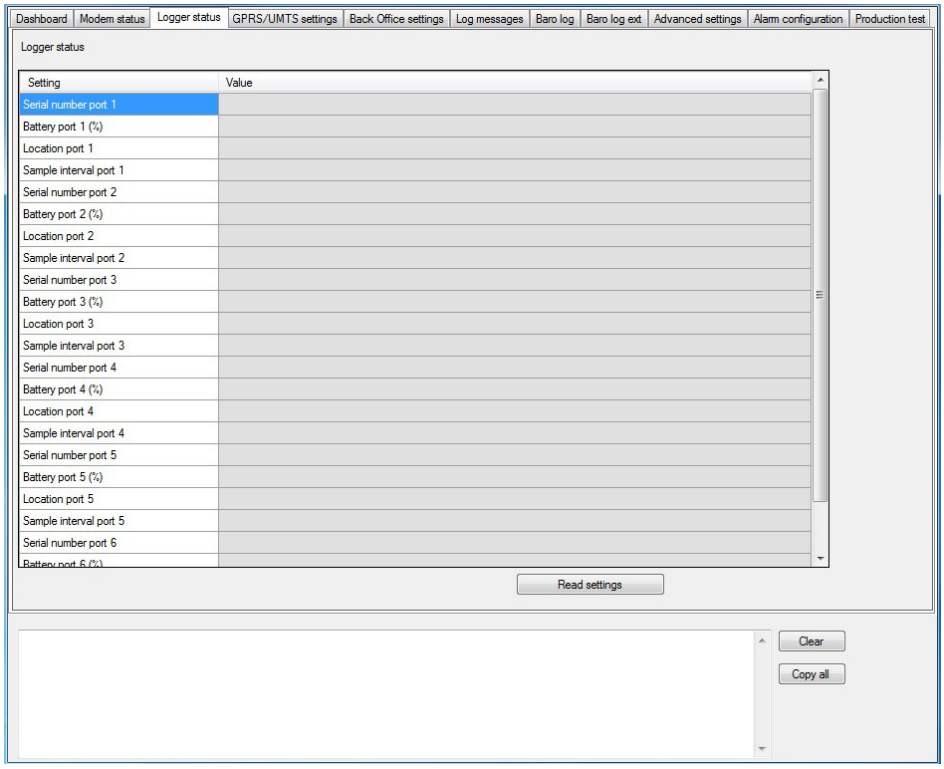

Parameter	Explanation	Permission
Serial number port <n>	The serial number of the sensor that is connected to port <n>.	RO
Battery port <n> (%)	The battery capacity (in %) of the sensor that is connected to port <n>.	RO
Location port <n>	The location of the sensor that is connected to port <n>.	RO
Sample interval port <n>	The send interval of the sensor that is connected to port <n>.	RO

Button	Function
Read settings	Starts the action of reading the parameter values.

6.8 GPRS / UMTS settings

These settings are necessary for a GPRS or UMTS connection. The settings are provider-specific and can be changed.

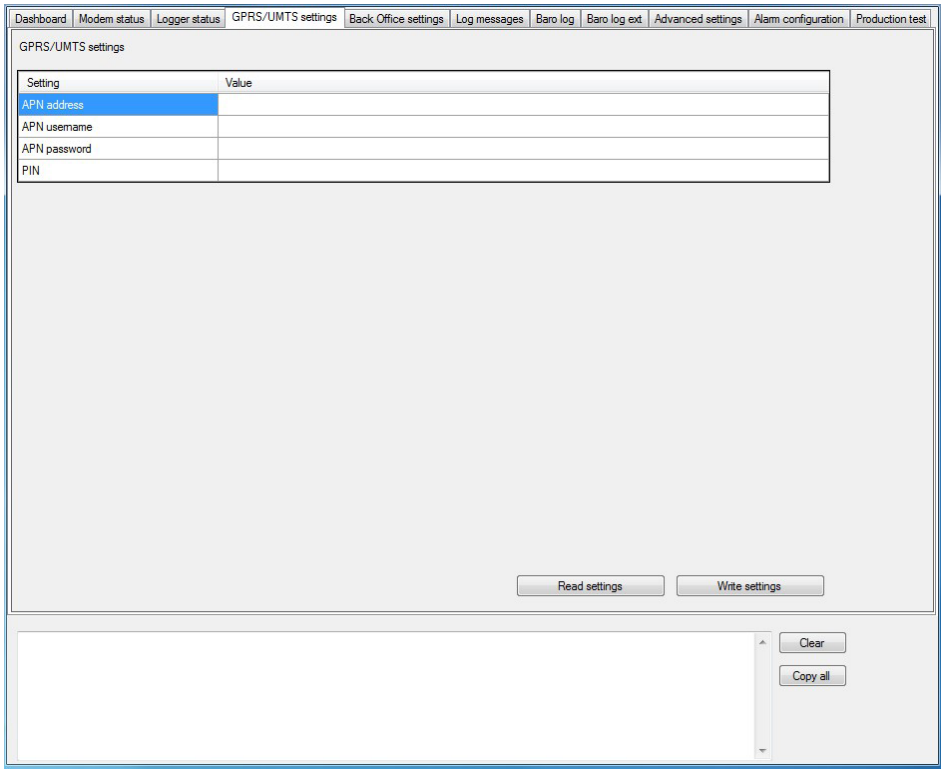

Parameter	Explanation	Permission
APN address	The registered address of the modem that is used for the connection to the network.	RW
APN username	The registered user name that is used for the connection to the network.	RW
APN password	The registered password that is used for the connection to the network.	RW
PIN	The PIN code that is used to unlock the SIM card.	RW

Button	Function
Read settings	Starts the action of reading the parameter values.
Write settings	Starts the action of saving the parameter values that has been changed.

6.9 GDT Server settings

These settings are necessary to communicate with the Back Office. The settings are automatically set. However, if there is no connection, the user can change the settings to see if a connection is possible through different settings.

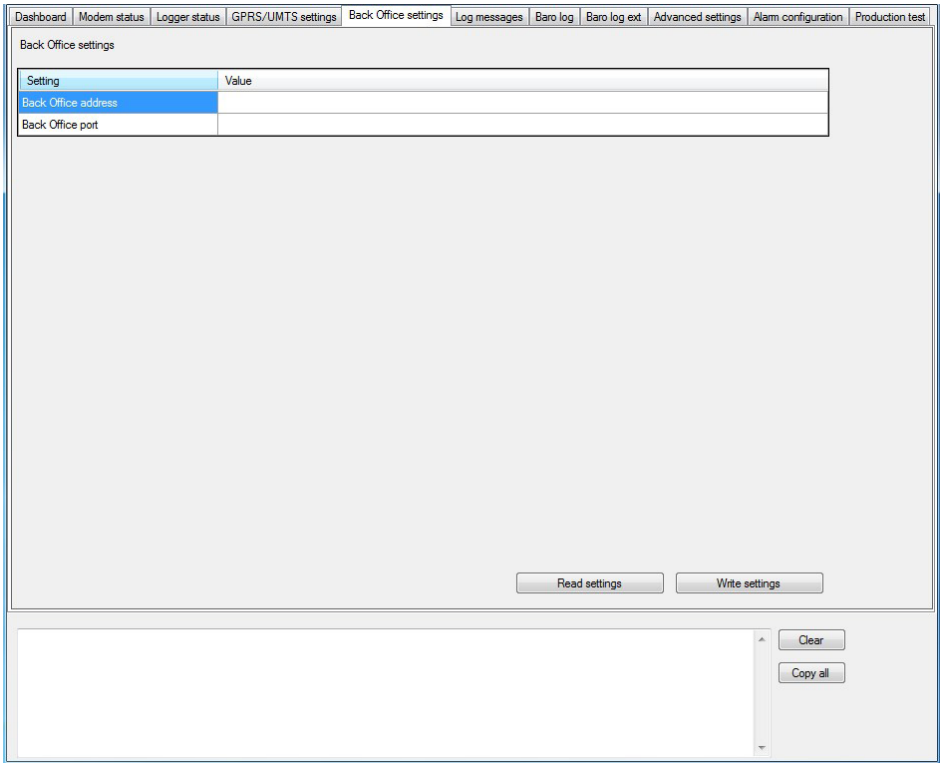

Parameter	Explanation	Permission
Back Office address	The address of the Back Office to which the modem is connected online.	RW
Back Office port	The port of the Back office to which a connection is made.	RW

Button	Function
Read settings	Starts the action of reading the parameter values.
Write settings	Starts the action of saving the parameter values that have been changed.

6.10 Log messages

The log of the modem shows the message history of modem. The modem adds a message when there is a failure, warning or when an action occured. The message contains the explanation of a failure, warning or general information about the action or situation. When the log memory is full, the oldest message will be overwritten by a new message.

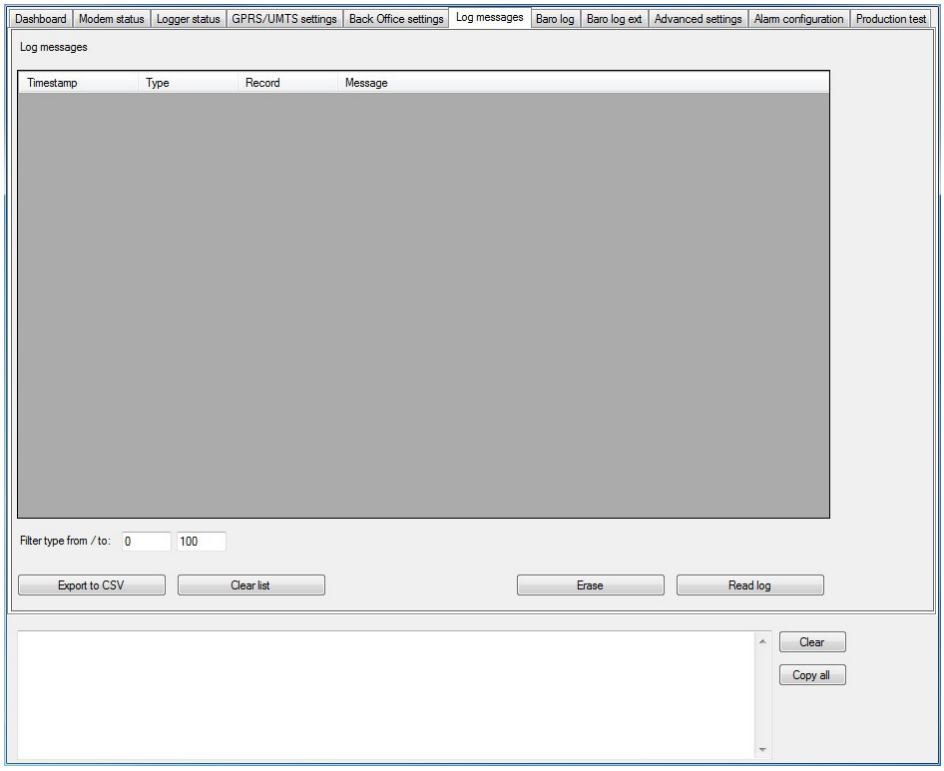

Parameter	Explanation
Timestamp	Date and time of the log message.
Type	The type of the log message. Refer to 6.10.1 Filter.
Record	The kind of record the log message belongs to: • AT command • Event • Coredump • EMP-Application Layer • EMP-Transport Layer
Message	The message text.

Button	Function
Export to CSV	Exports all displayed log messages to a CSV file. Follow the wizard instructions to save the file onto the computer.
Clear list	Clears the list of log messages.
Erase	Erases the log message.
Read log	Starts the action of reading the log data from the modem.

6.10.1 Filter

The filter (“Filter type from/to:”) has two fields in which the user can insert the types of log messages he wants to read.

Note
The filter is only applied to the view. When exporting to a CSV file, all logs are stored.

Filter code	Filter type	Explanation
0 to 50	Error	Error messages
100	Info 1	All sorts of important events, e.g. automatic identification of wireless module.
125	Info 2	Events that display the current status of the session (mostly at the start of a session).
150	Detailed info 1	Packages (including the contents) of the communication with the Back Office server.
175	Detailed info 2	e.g. incorrectly executed AT commands
200 to 255	Detailed info 3	e.g. successfully executed AT commands

6.11 Baro log

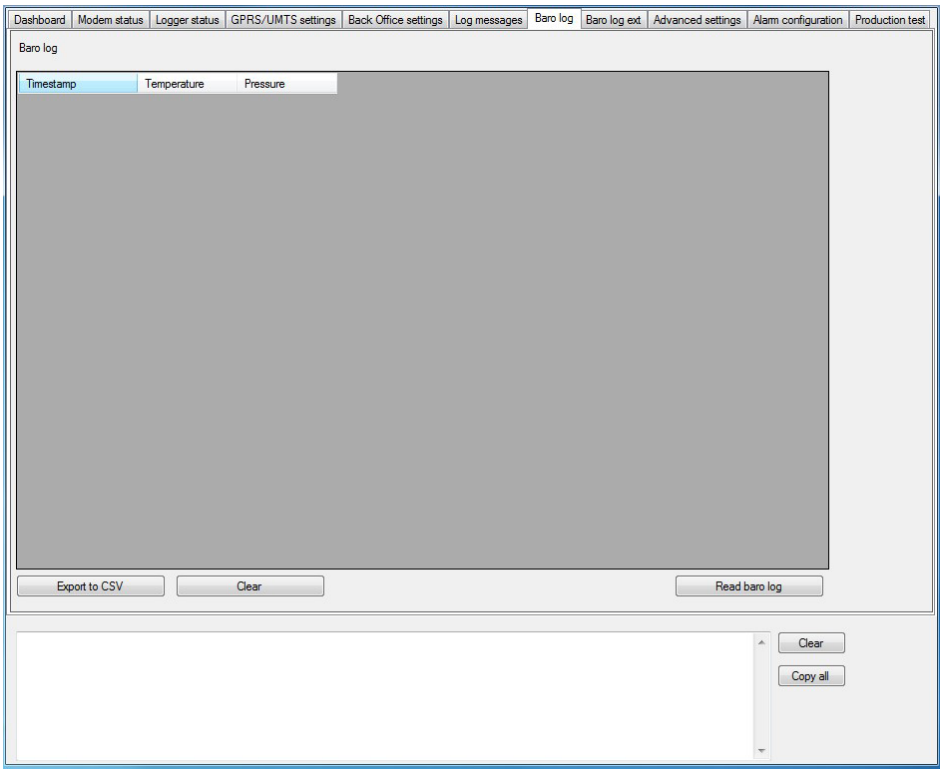

For modems before the GDT-S Prime:
The Baro log menu shows the measurement history of the internal barometer of the modem. The baro log can store the barometric pressure and temperature measurements performed by the internal barometer. The storage of these measurements is required if the modem is not able to have a connection with the Back Office

Server for a long time. The pressure measurements are crucial in case barometric compensation must be applied. For a reliable barometric compensation, the air pressure should be recorded at least every 4 hours.

Because the barometer does not have its own interval, the barometric measurements are connected to the regular wake-up interval. Only when the modem becomes active (wakes up), the barometer will perform its measurements. Therefore, the wake-up interval should not be longer than 4 hours. The baro log memory has space for approximately 85 entries (with a measurement interval of 4 hours, the baro log will be full after 2 weeks). After the log memory is full, the oldest measurement data will be overwritten by new measurement data. However, if the wakeup interval is much shorter than 4 hours, for example only 15 minutes, the baro log memory will become full too fast. Therefore there is an extra parameter that indicates the 'ideal' interval period for the baro log. When the modem becomes active, it will calculate whether the next wake-up moment is still within the 'ideal' interval period. If this is the case, the barometer will perform the measurements at the next wake-up moment.

The barometer of the GDT-S Prime has its own interval therefore it can be setup separately.

Parameter	**Explanation**
Timestamp	Date and time of the measurement
Temperature	The measured ambient temperature.
Pressure	The measured air pressure.

Button	**Function**
Export to CSV	Exports all log messages to a CSV file. Follow the wizard instructions to save the file onto the computer.
Clear	Clears the list of measurement data.
Read baro log	Starts the action of reading and showing the measurement data that is stored in the modem.

6.12 Baro log ext

The log of the internal Baro logger shows the latest 85 measurements.
From GDTS-Prime the Baro log is increases from 85 to 2048 records.

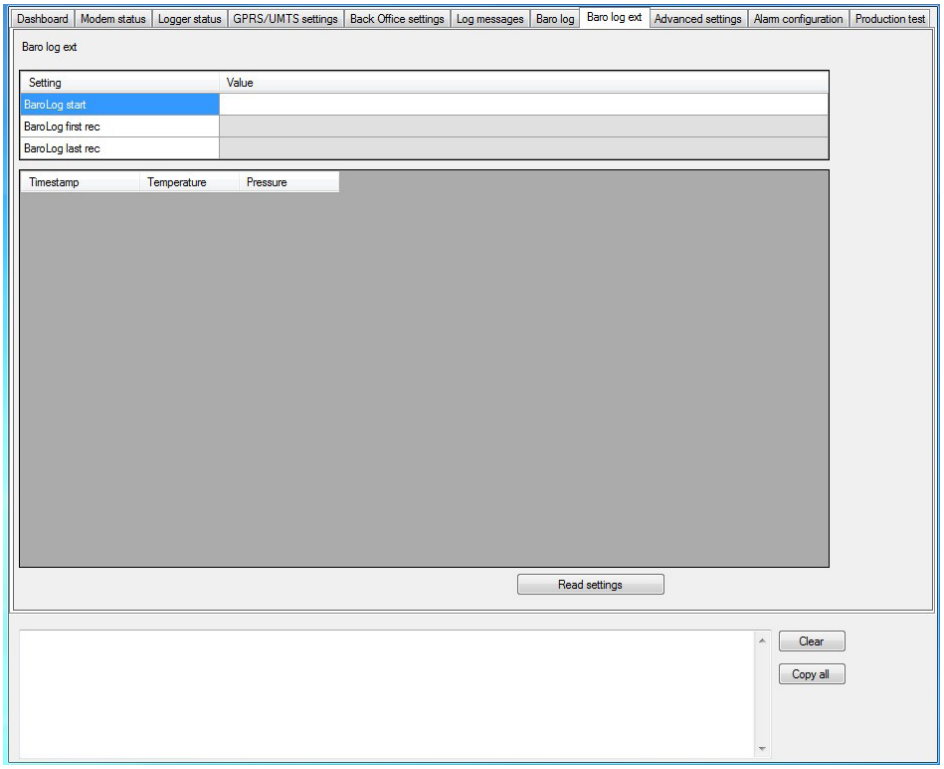

Parameter	Explanation	Permission
BaroLog start	Absolute time reference for measurement points	RO
BaroLog first rec	Indices number from the first data record	RO
BaroLog last rec	Indices number from the last data record	RO
Timestamp	Date and time of the measurement	
Temperature	The measured ambient temperature	
Pressure	The measured air pressure	

Button	Function
Read settings	Starts the action of reading and showing the measurement data that is stored in the modem.

6.13 Advanced settings

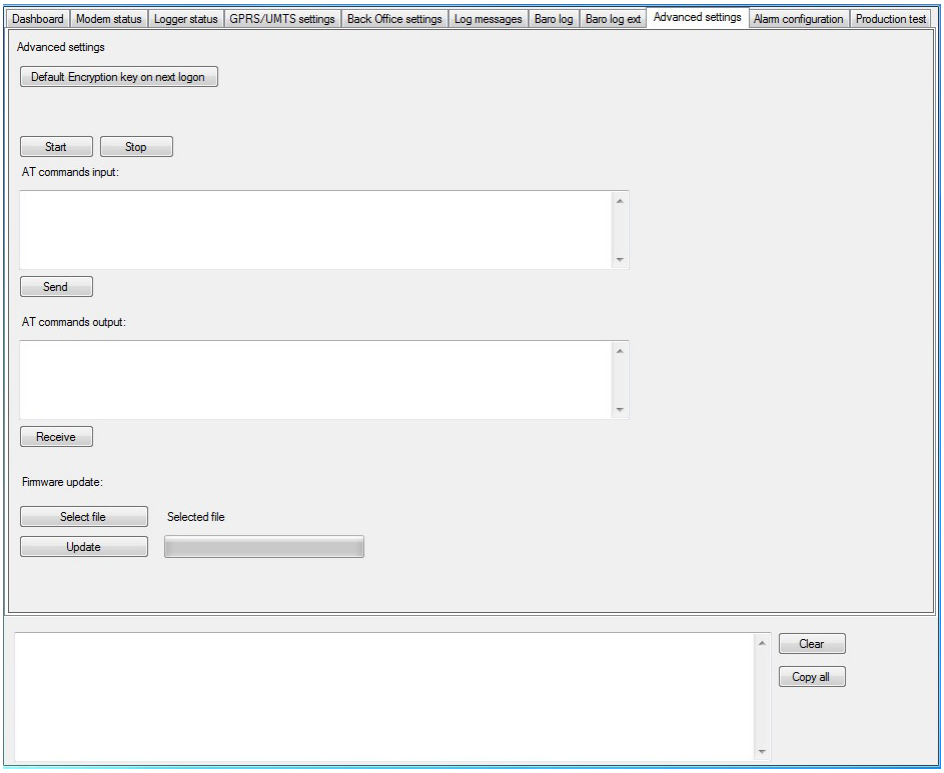

6.13.1 Advanced settings

Button	Function
Default Encryption key on next logon	Requests the GDT Server to generate a new encryption key when the modem is logged on the next time.

Note
The "Default Encryption key on next logon" parameter also needs to be configured in the GDT Server!

6.13.2 AT commands

Button / field	Function
Start	Sets the modem in the AT command mode. Without pressing the Start button, the user cannot send AT commands to the modem.
Stop	Sets the modem in the normal working mode.
Send	Sends the AT command to the modem.
AT commands input	In this field the user can type the commands regarding the tasks you want the module of the modem to perform.
Receive	Receives the reply message from the modem.
AT commands output	In this field, reply messages from the module of the modem will appear.

6.13.3 Firmware update

Button	Function
Select file	Enables the user to select a valid firmware file. Follow the wizard instructions.
Update	Starts the action of updating the firmware of the modem. The status bar shows the progress of the firmware update.

6.14 Alarm configuration

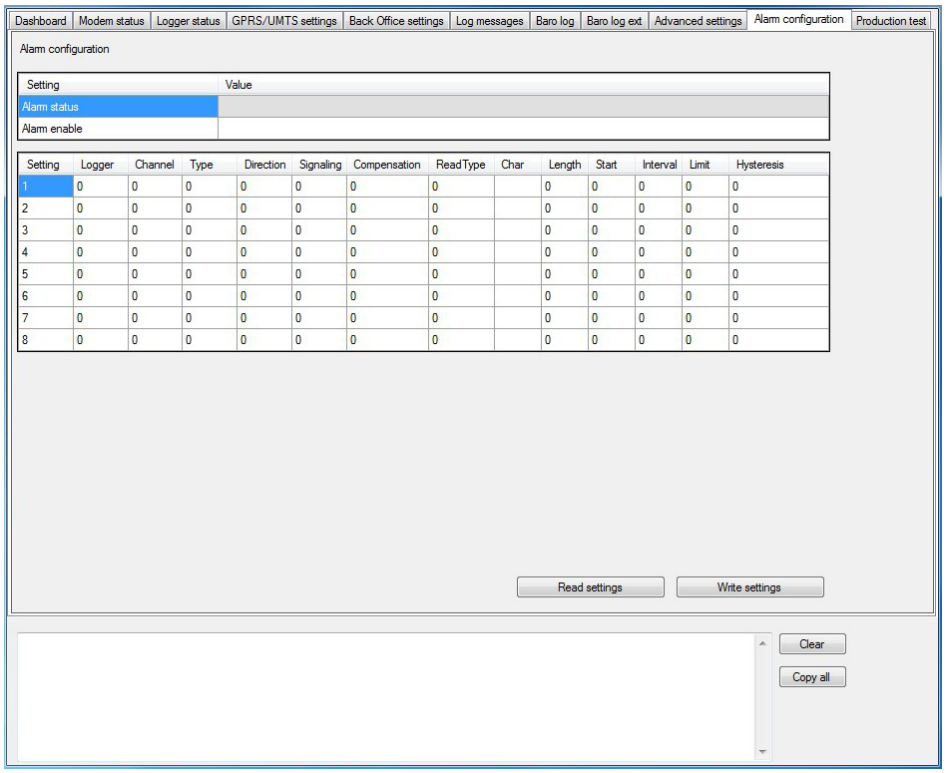

The alarm settings can be setup for a logger port and measurement channel. The alarm conditions are relatively simple;
A choice must be made whether it is one of overshoot, undershoot or rapid increase or decrease.

Parameter	Explanation	Permission
Alarm status	Current alarm status of each alarm condition	RO
Alarm enable	Alarm check enable per alarm setting	RO

Parameter	Explanation
Setting	Number of settings
Logger	Logger port from the measurement channel on which the alarm configuration is set.
Channel	Sensor channel on which the alarm configuration is set.
Type	Setting of alarm conditions 0=Limit, 1=Fluctuation.
Direction	Setting of alarm conditions 0=Above, 1=Below.
Signaling	Setting of alarm conditions 0=Start, 1=Start and end.
Compensation	Setting of alarm conditions 0=Normal, 1=Compensation.
ReadType	Type of command for the purpose of protocol: 0=Diver protocol, 131= e+ protocol.
Char	Read command to retrieve most recent result of the logger channel depending on the number of channels. Type logger Channel Channel Channel 1 2 3 2 channel V v 3 channel V U v
Length	Read-length in bytes, use 16.
Start	Reference (start) time when alarm conditions are evaluated.
Interval	Maximum time period between two alarm checks.
Limit	Limit value at which the alarm condition occurs.
Hysteresis	Hysteresis value at which the alarm condition is corrected.

Button	Function
Read settings	Starts the action of reading the parameter values
Write settings	Starts the action of saving the parameter values that have been changed

6.15 Production test

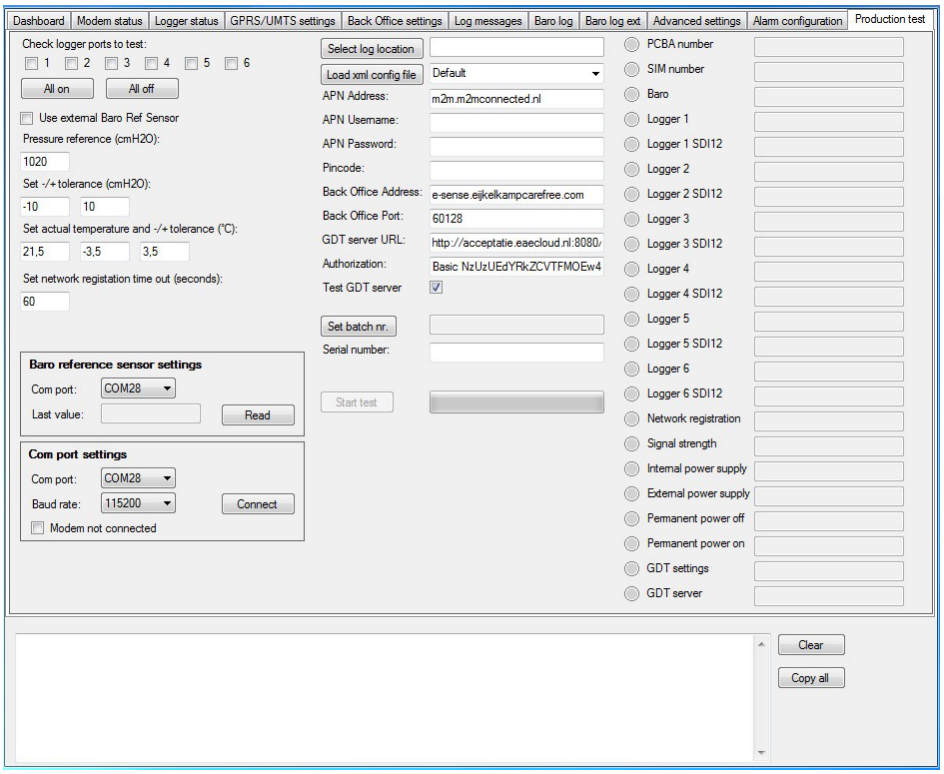

Button / Field	Explanation
Check logger ports to test: 1,2,3,4,5,6.	Check box logger ports to include or exclude a port.
All on	Turn on all logger ports.
All off	Turn off all logger ports.
Use external Baro Ref Sensor	Check box for selecting external Baro reference sensor.
Pressure reference (cmH_2O)	Set reference value of the barometric pressure when not using external Baro reference sensor.
Set -/+ tolerance (cmH_2O)	Set value for the tolerance borders.
Set actual temperature and -/+ tolerance (°C)	Set temperature reference value and the tolerance for the temperature check borders.
Set network registration time out (seconds)	Set the network (GPRS or UMTS) registration time out.
Select log location	Enter the backup location of the test results log.
Load xml config file	Selecting the needed config file with the information of the default setting for the used Sim card.
APN Address	The registered address of the APN that is used for the connection to the network.
APN Username	The registered user name that is used for the connection to the network.
APN Password	The registered password that is used for the connection to the network.

Pincode	The PIN code that is used to unlock the SIM card.
Back Office Address	The address of the Back Office to which the modem is connected online.
Back Office Port	The port of the Back Office to which a connection is made.
GDT server URL	The URL of the GDT server.
Authorization	Authorization key for the GDT server.
Test GDT server	Check box for including or excluding the connection to the GDT server in the test.
Set batch nr.	The batch number of the PCB.
Serial number	The serial number of the modem.
Start test	Starts the production test.

6.15.1 Baro reference sensor settings

Button / Field	Explanation
Com port	Enables the user to select the com port
Read	Starts the action of reading the parameter value.
Last value	Shows the last read value.

6.15.2 Com poert settings

Com port settings	Explanation
Com port	Enables the user to select the com port
Baud rate	Enables the user to select the baud rate (only 115200).
Connect	Makes the connection to the com port.
Modem not connected	Info box to see if the modem is correctly connected.

6.16 Getting started

Required tools:
1. Computer with USB port, e-mail and internet access.
2. Service tool software (ServiceTool.exe).
3. Service cable (art. no.:).
4. GDT-S Prime (+MDC cable or GDT 1-eye cable+ Diver).
5. Magnet.

Start Service tool on your computer.
Once you have put the Service tool executable on your computer you can run it, no additional installation steps are required. A screen with a number of tabs will appear, select the Dashboard tab:

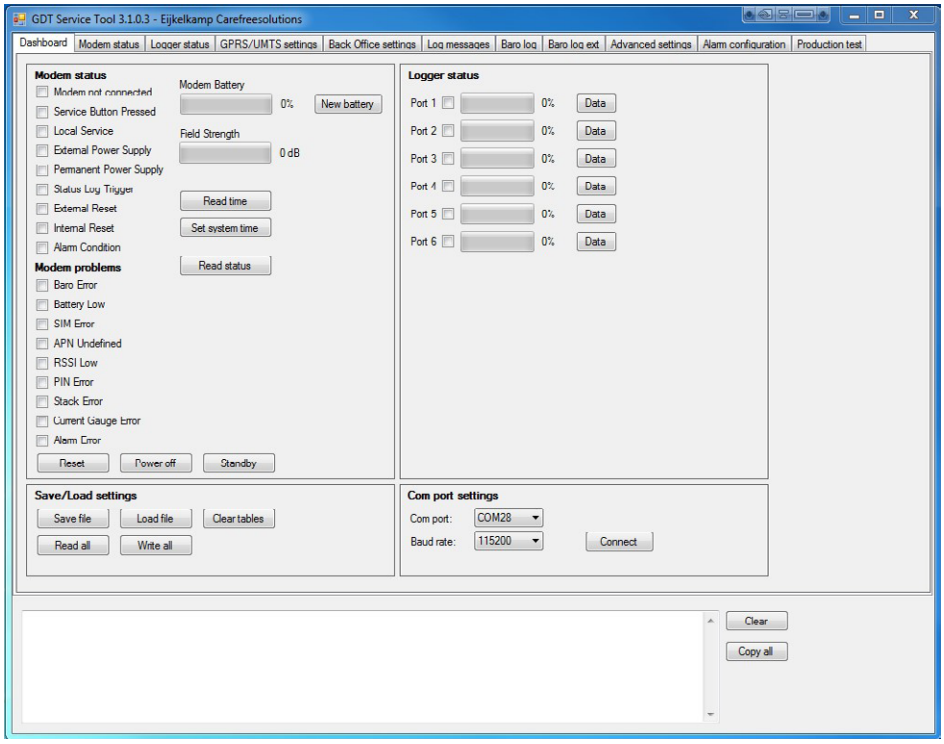

When you select the Com port drop down menu you can see which com ports the tool can connect to. As soon as you connect the Service cable to your computer you will notice that an additional com port has been added to this drop down menu.

<u>Connect Service tool to GDT-S Prime.</u>

Connect the computer to the GDT-S Prime by using the Service cable.

Computer: Use any available USB port. You will notice that the Service tool now recognizes an additional com port (see above).

GDT-S Prime: The modem has a dedicated service connector that can only be accessed after opening the modem.

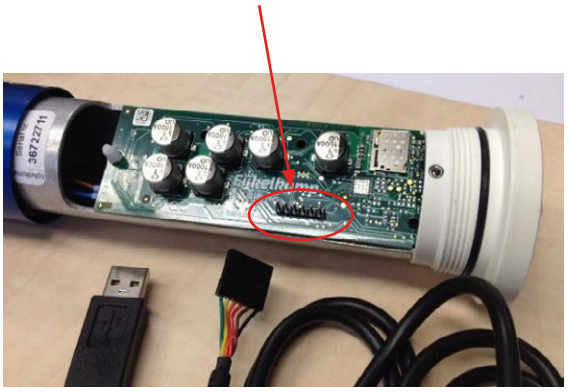

Make sure when you connect the cable to the modem that the triangle mark on the cable connector (or black cable of the connector) matches with position 1 on the board connector.

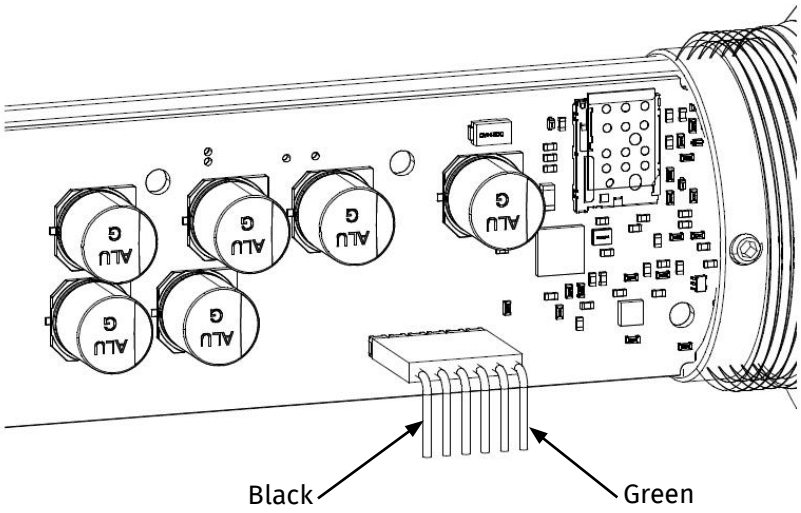

You now need to click the Connect button in the Dashboard screen of the Service tool

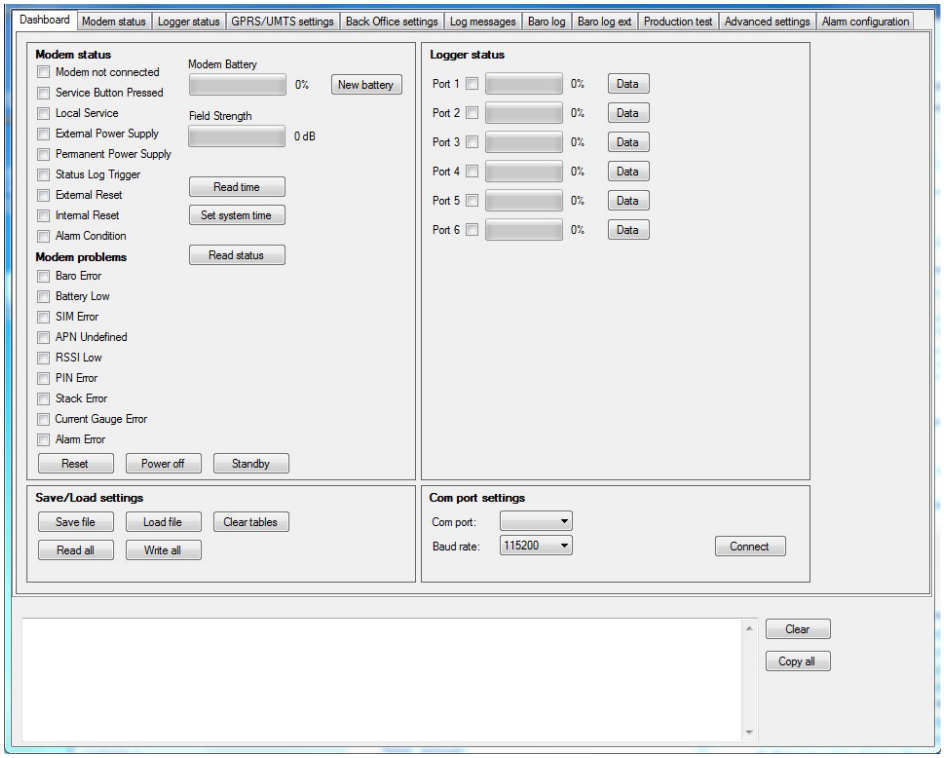

The final step is to re-start the modem with the magnet: the modem will now recognize the Service tool connection and the Dashboard screen will fill with modem details.

The Connection / Error LED will turn on (green) and will stay on as long as there is a connection running between the service tool and the modem.

<u>Modem debugging</u>

See (separate) instructions, as appropriate.

<u>Disconnect Service tool from GDT-S Prime</u>

When you are done with debugging click either the Standby or the Disconnect button on the Dashboard screen of your Service tool: The GDT-S Prime will return to normal operation mode and you can install it as you see fit.

7 BBT (remote connection)

7.1 System requirements

Note
It is only possible to remotely communicate with the modem if the modem is online. Modem and sensor settings are handled by the modem at the next wake-up. Server settings are handled at the mailcheck (the default time is 5 minutes before wake-up).

Requirements
Internet connection
Web browser

7.2 Default values

The screens in this chapter show example values. These are not necessarily the default values. Refer to 5.2 for the default values.

7.3 Login

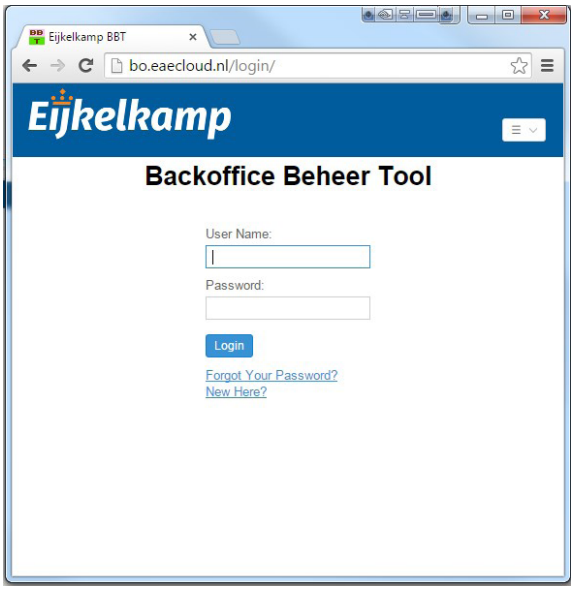

Note
In the login screen, service personnel can log into the Service website.

1. Fill in the User name.
2. Fill in the Password.
3. Press the Login button to confirm the login.

For more information use the wiki on the site.

8 Maintenance

8.1 Preparation

CAUTION
Only original parts must be used, otherwise the guarantee will be void.

Make sure you take with you the following tools and accessories:
- Cloth (clean, dry and lint-free);
- Replacement desiccant kit. Refer to 9.1.
- Replacement battery. Refer to 9.1.
- Replacement SIM card (optional).
- Replacement antenna.
- Replacement cables and sensor.

8.2 General inspection overview

The modem requires little maintenance. However, if you need to do maintenance work, always check the following points during maintenance.

Inspection	Check	Action (if required)
Enclosure (external)	Dirt / Humidity	Clean and dry with a dry, lint-free cloth.
Enclosure (internal)	Humidity	Replace the desiccant kit. Refer to 8.3.6. If wet or moisty, contact Eijkelkamp.
Sensor cable	Wear or damage	Replace the cable.
Antenna	Wear or damage	Replace the antenna.
SIM card		Refer to 8.5

Note
It is advised always to take a replacement battery with you. Check the battery capacity level beforehand via the Eijkelkamp Webportal or the e-mail functionality. Refer to the Online Manual or to Supplement 2 on how to check the battery capacity level.

Note
Never take a lithium battery or a modem with an installed lithium battery with you as luggage during a flight. Due to severe civil aviation regulations (class 9 dangerous goods), it is forbidden to take a lithium battery with you during a flight.

8.3 Inspection and cleaning

CAUTION
We advise you to take the necessary ESD safety regulations for the modem during assembly. (When the O-rings are damaged, contact Eijkelkamp Soil & Water.)

8.3.1 Inspecting and cleaning the outside of the modem

1. Check the outside of the modem for dirt and humidity. Pay special attention to the vent. The vent has to be free of dirt. Never use sharp tools to clean.
2. Clean and dry the modem with a dry, lint-free cloth.

8.3.2 Dismounting the modem

Note
If you need to open the enclosure, it is advised to remove the modem from the measuring site, so the modem can be taken to a clean and dry environment.

1. Check if the cable and connector are still connected correctly. Also check the cable and connector for possible defects.
2. Disconnect the antenna from the antenna connector. Turn the hexagon locking counter clockwise.
3. Disconnect the sensor cable from the sensor port. Turn the locking ring counter clockwise.
4. Clean the antenna connector and sensor port with a dry, lint-free cloth.
5. Take the modem to a clean and dry environment.

8.3.3 Opening the enclosure

CAUTION
Do not open the modem in the field. Only open the modem in a clean and dry environment.

Note
It is advised not to open the enclosure unless it is really necessary (e.g. for placing / replacing the batteries). Opening the enclosure increases the risk of leakage afterwards.

1. Turn the housing counter clockwise and **carefully** remove the slider out of the housing.

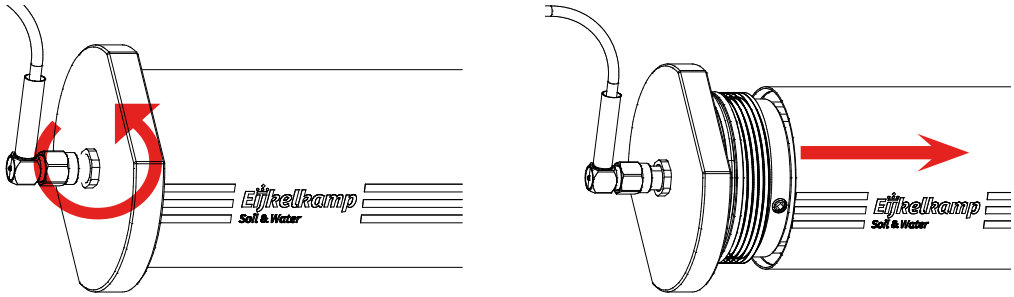

8.3.4 Inspecting and cleaning the inside of the modem

1. Check the inside of the modem for dirt, dust, humidity and damage. Pay special attention to the sealings of the slider top cap and the bottom cap, the sealing rings must be free of dirt, undamaged and not-twisted.

WARNING
The modem must be free from dirt, dust, humidity and damage. Only clean the seal and flash ridge with a clean lint-free cloth if necessary. Never touch the electronics of the printed circuit board (PCB)!

CAUTION
Do not use greasy substances and agents, such as white spirit, acetone or thinner.

8.3.5 Replacing the desiccant bag

CAUTION
Only use original parts. A new desiccant kit can be ordered at Eijkelkamp. Refer to 6.1.

CAUTION
Work only in a dry environment, try to act quickly during the replacing of the desiccant bag!

1. Remove the old desiccant bag carefully and check whether this bag is excessively wet. If this is the case, this could be an indication of leakage. Please contact Eijkelkamp Soil & Water service department.

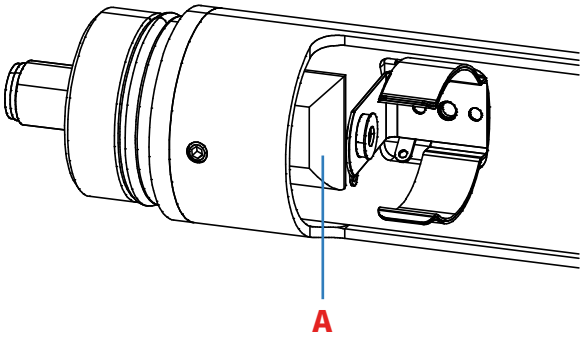

CAUTION
The new desiccant bag (A) must be taken out of its package at the last moment. It must be protected against all kinds of moisture before it is placed in the dry enclosure of the modem.

2. Carefully place the new desiccant bag into the same place as the old one

3. If it is not necessary to replace the battery, close the enclosure immediately. See 8.3.6.

8.3.6 Closing the enclosure

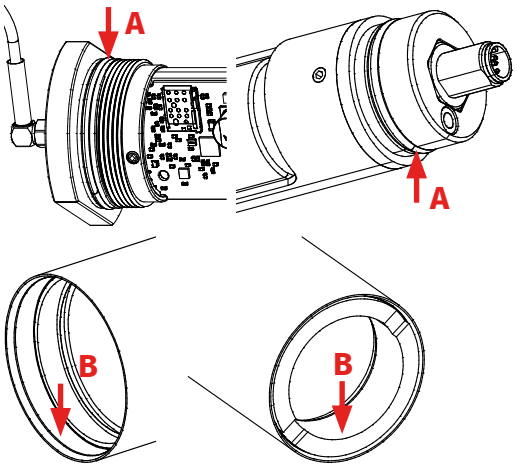

1. Check whether the O-rings (A) are clean and undamaged.
2. Check whether the top cap and the bottom cap with the O-rings is dirt-free, along with the sealing surfaces (B) in the housing tube.
3. If no grease is visible on the surface, apply a thin layer of acid-free vaseline (prevent dirt, work clean)
4. Carefully slide the modem back into the housing tube and turn the slider into the housing with a turning movement completely to the top cap.

8.3.7 Mounting the modem

1. Connect the antenna to the antenna connector. Refer to 4.4.2.
2. Connect the sensor cable to the sensor port. Refer to 4.4.3.
3. Re-install the modem in the monitoring well or well cover.
4. Start the commissioning process. Refer to 4.5.

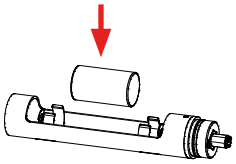

8.4 (Re-)placing the battery

On receipt of a 'low battery' alarm, the battery must be replaced along with the desiccant bag.

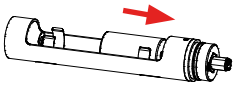

We advise you to take the necessary ESD safety regulations and to apply new acid-free vaseline to the O-rings of the modem during assembly.

Note
When O-rings are damaged contact Eijkelkamp Soil & Water.

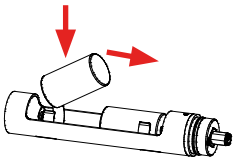

Note
Use original or recommended parts. Refer to 9.1.

1. Follow all procedures of 8.3.1 to 8.3.5.

CAUTION
Work according to your local ESD safety regulations. Avoid touching the printed circuit board (PCB).

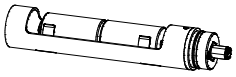

Note
All setting changes that have not yet been saved will be lost when the battery is disconnected.

2. Carefully remove the empty battery.
3. Place the replacement battery pack.

CAUTION
Prevent damage to the battery.

Note
Make sure the battery is placed in the correct position.

Note
When the battery is inserted into the modem:
- **The LED will briefly go on to indicate the modem is powered**
- **The modem will behave as if the Start switch was magnetically activated**
- **When this is not the case, check if the contacts from the battery holder are correctly placed to the contacts of the battery.**
- **If necessary take out the battery and carefully bend the contacts and place the battery once again. When the new battery is placed you have to tell the modem that a new battery is installed. For an e-mail instruction use Supplement 2 or use the Eijkelkamp Web Portal for correct resetting the battery capacity used.**

When placing two D cell alkaline batteries change to/check if the battery capacity max (µAh) is 10400000 µAh.
When placing a DD cell lithium battery change to/check if the battery capacity max (µAh) is 28000000 µAh.

6. Follow all procedures of 8.3.6 to 8.3.7.
7. Dispose of the old battery in a proper way. Refer to 2.6.2.

8.5 (Re-)placing the SIM card (optional)

WARNING
Depending on the new SIM card the modem settings may need to be changed, therefore always contact Eijkelkamp Soil & Water first.

WARNING
Always disconnect the battery before replacing the SIM card.

CAUTION
Make sure that the PIN code of the SIM card is turned off or set to the desired PIN code.

Note
If a PIN code is used, make sure that the PIN code that was configured in the modem is identical to the PIN code of the SIM card.

1. Follow all procedures of 8.3.1 to 8.3.5.
2. Remove the battery. Refer to 8.4
3. Push onto the SIM. Refer to step 1 in the figure.
4. Remove the SIM card from the holder. Refer to step 2 in the figure.
5. Place the new SIM card into the holder. Refer to step 4 and 5 in the figure.
6. Place the battery. Refer to 8.4.
7. Follow all procedures of 8.3.6 to 8.3.8.

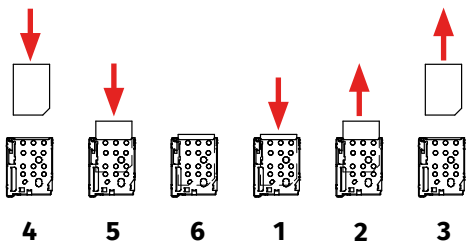

8.6 Storage

CAUTION
Do not place the modem in a humid and dusty environment. Do not place any heavy materials on top of the modem.

1. Clean the outside of the modem. Refer to 8.3.1.
2. Dismount the modem. Refer to 8.3.2.
3. Store the modem in a clean and dry place.

Note
If a modem is not to be used for a longer period of time, it is important that the modem will be set in the power OFF mode via the Eijkelkamp Web Portal or e-mail functionality. Refer to the online manual on Eijkelkamp Web Portal or Supplement 2 on how to put the modem in the power OFF mode. In case the modem will not be used for a very long period of time, it is also advised to disconnect the battery. Even if the modem is in the power OFF mode, it actually continues to draw a minimum amount of current and thus drains the battery. However, it is also advised not to open the enclosure of the modem unless you really need to do so. Opening the enclosure increases the risk of leakage afterwards. Consider whether the battery needs to be removed or not. If the battery needs to be removed, refer to step 1 and 2 of 5.4.

9 Specifications

9.1 Parts list

CAUTION
Only original parts must be used, otherwise the guarantee will be void (except Battery D).

Article number	Part name
113401	Global Data Transmitter Single Prime (GDT-S Prime) GPRS
113402	Global Data Transmitter Single Prime UMTS
113121	Battery (D, LR20, MX1300), 1.5 Volt, alkaline, low in mercury and cadmium free, blister pack of 2 pieces (or similar).
113420	Battery for GDT-S Prime, 3.6 V / 35 Ah, Tadran Lithium SL-2790S, size: DD
113434	GPRS / UMTS antenna for GDTS-Prime
11313401	Antenna mounting plate
113135	Adaptor ring GDT-S
H276414	Dessicant bag 5 gr.